ASCO™ General Service Solenoid Valves

Brass or Stainless Steel Bodies | Pilot Operated | 3/8" to 2 1/2"

Features

- Wide range of pressure ratings, sizes, and resilient materials provide long service life and low internal leakage
- High flow valves for liquid, corrosive, and air/inert gas service
- Lead-free versions available for Safe Drinking Water Act Section 1417 compliance
- Industrial applications include:
  - Car wash
  - Laundry equipment
  - Air compressors
  - Industrial water control
  - Pumps

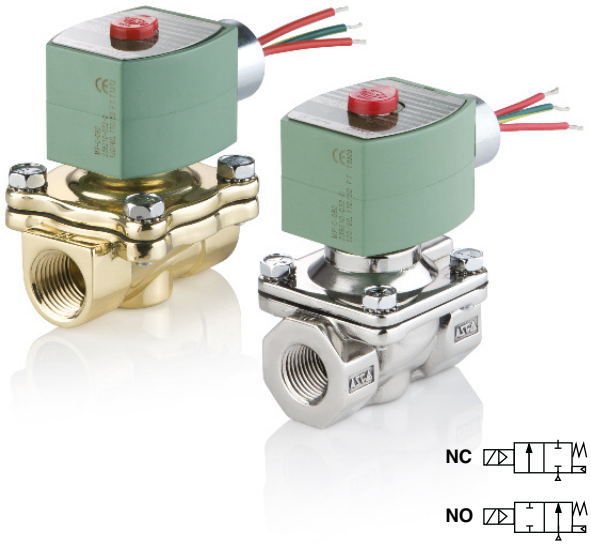

Construction

Valve Parts in Contact with Fluids		
Body	Brass	304 Stainless Steel*
Seals and Discs	NBR or PTFE	
Disc-Holder	PA	
Core Tube	305 Stainless Steel	
Core and Plugnut	430F Stainless Steel	
Springs	302 Stainless Steel	
Shading Coil	Copper	Silver

* Catalog Numbers 8210G127, 8210G129, 8210G132, 8210G133 have 316L Stainless Steel bodies.
** In accordance with the Safe Drinking Water Act (SDWA) Section 1417, and compliant to NSF/ANSI 372 low lead requirements.

Electrical

Standard Coil and Class of Insulation	Watt Rating and Power Consumption				Spare Coil Part Number			
		AC			General Purpose		Explosionproof	
	DC Watts	Watts	VA Holding	VA Inrush	AC	DC	AC	DC
F	-	6.1	16	40	238210	-	238214	-
F	11.6	10.1	25	70	238610	238710	238614	238714
F	15.8	-	-	-	-	501695	-	501696
F	16.8	16.1	35	180	272610	97617	272614	97617
F	-	17.1	40	93	238610	-	238614	-
F	-	20	43	240	99257	-	99257	-
F	-	20.1	48	240	272610	-	272614	-
F	30.8	-	-	-	-	501695	-	501696
H	11.6	-	-	-	-	238910	-	238914
H	40.6	-	-	-	-	238910	-	-

Standard Voltages: 24, 120, 240, 480 volts AC, 60 Hz (or 110, 220 volts AC, 50 Hz). 6, 12, 24, 120, 240 volts DC. Must be specified when ordering.
Other voltages available when required.

Solenoid Enclosures

Standard:

RedHat II - Watertight, Types 1, 2, 3, 3S, 4, and 4X
RedHat - Type I.

Optional:

RedHat II - Explosionproof and Watertight, Types 3, 3S, 4, 4X, 6, 6P, 7, and 9

Red-Hat - Explosionproof and Watertight, Types 3, 4, 4X, 7, & 9.

(To order, add prefix "EF" to catalog number, except Catalog Numbers 8210B057, 8210B058, and 8210B059, which are not available with Explosionproof enclosures.)

See Optional Features Section for other available options.

Nominal Ambient Temp. Ranges

RedHat II/RedHat AC: 32˚F to 125˚F (0˚C to 52˚C)

RedHat II DC: 32˚F to 104˚F (0˚C to 40˚C)

RedHat DC: 32˚F to 77˚F (0˚C to 25˚C)
(104˚F/40˚C occasionally)

8210G227 AC: 32˚F to 130˚F (0˚C to 54˚C)
DC: 32˚F to 90˚F (0˚C to 32˚C)

Refer to Engineering Section for details.

Approvals

- UL listed as indicated.
- CSA certified.
- RedHat II meets applicable CE directives.
  Refer to Engineering Section for details.
- ATEX/IECEx certified with prefix "EV" as listed.
  Refer to Optional Features Electrical Section for details.
- Compliance with the Safe Drinking Water Act (SDWA) Section 1417 Lead Free Requirements as indicated.

ASCO™ General Service Solenoid Valves

Brass or Stainless Steel Bodies | Pilot Operated | 3/8" to 2 1/2"

Specifications (English units)

Pipe Size (in)	Orifice Size (in)	Cv Flow Factor	Operating Pressure Differential (psi)							Max. Fluid Temp. °F		Brass Body			Stainless Steel Body			Watt Rating/ Class of Coil Insulation ⑦	
			Min.	Max. AC			Max. DC												
				Air-Inert Gas	Water	Light Oil @ 300 SSU	Air-Inert Gas	Water	Light Oil @ 300 SSU	AC	DC	Catalog Number	Const. Ref. ④	UL ⑤ Listing	Catalog Number	Const. Ref. ④	UL ⑤ Listing	AC	DC
NORMALLY CLOSED (Closed when de-energized), NBR or PTFE ② Seating																			
3/8	3/8	1.5	①	150	125	-	40	40	-	180	150	8210G073 ③	1P	●	8210G036 ③	1P	●	6.1/F	11.6/F
3/8	5/8	3	0	150	150	-	40	40	-	180	150	8210G093 ♦	5D	❍	-	-	-	10.1/F	11.6/F
3/8	5/8	3	5	200	150	135	125	100	100	180	150	8210G001 ▼♦	6D	❍	-	-	-	6.1/F	11.6/F
3/8	5/8	3	5	300	300	300	-	-	-	175	-	8210G006 ✓	5D	❍	-	-	-	17.1/F	-
1/2	7/16	2.2	①	150	125	-	40	40	-	180	150	8210G015 ③	2P	●	8210G037 ③	2P	●	6.1/F	11.6/F
1/2	5/8	4	0	150	150	-	40	40	-	180	150	8210G094 ✓♦	5D	❍	-	-	-	10.1/F	11.6/F
1/2	5/8	4	0	150	150	125	40	40	-	175	150	-	-	-	8210G087 ✓	7D	●	17.1/F	11.6/F
1/2	5/8	4	5	200	150	135	125	100	100	180	150	8210G002 ▼♦	6D	❍	-	-	-	6.1/F	11.6/F
1/2	5/8	4	5	300	300	300	-	-	-	175	-	8210G007	5D	❍	-	-	-	17.1/F	-
1/2	3/4	4	5	-	300	-	-	300	-	130	90	8210G227	5D	❍ †	-	-	-	17.1/F	40.6/H
3/4	5/8	4.5	0	150	150	125	40	40	-	175	150	-	-	-	8210G088 ✓	7D	●	17.1/F	11.6/F
3/4	3/4	5	5	125	125	125	100	90	75	180	150	8210G009 ▼♦	9D	❍	-	-	-	6.1/F	11.6/F
3/4	3/4	5	0	150	150	-	40	40	-	180	150	8210G095 ✓♦	8D	❍	-	-	-	10.1/F	11.6/F
3/4	3/4	6.5	5	250	150	100	125	125	125	180	150	8210G003 ▼	11D	❍	-	-	-	6.1/F	11.6/F
3/4	3/4	6	0	350	300	200	200	200	200	200	180	8210G026 ② ‡ ◆	40P/10D	●	-	-	-	16.1F	30.8/F
1	1	13	0	150	125	125	135	120	120	180	180	8210G054 ‡ ◆ ♦	41D/31D	●	8210G089 ‡ ◆	45D/15D	●	16.1/F	30.8/F
1	1	13	5	150	150	100	125	125	125	180	150	8210G004 ▼ ♦	12D	❍	-	-	-	6.1/F	11.6/F
1	1	13.5	0	300	225	115	-	-	-	200	-	8210G027	42P	●	-	-	-	20.1/F	-
1	1	13.5	10	300	300	300	-	-	-	175	-	8210G078 ②	13P	-	-	-	-	17.1/F	-
1 1/4	1 1/8	15	0	150	125	125	135	120	120	180	180	8210G055 ‡ ◆	43D/32D	●	-	-	-	16.1/F	30.8/F
1 1/4	1 1/8	15	5	150	150	100	125	125	125	180	150	8210G008 ▼ ♦	16D	❍	-	-	-	6.1/F	11.6/F
1 1/2	1 1/4	22.5	0	150	125	125	135	120	120	180	180	8210G056 ‡ ◆	44D/33D	●	-	-	-	16.1/F	30.8/F
1 1/2	1 1/4	22.5	5	150	150	100	125	125	125	180	150	8210G022 ▼ ♦	18D	❍	8210G127	52D	●	6.1/F	11.6/H
2	1 3/4	43	5	150	125	90	50	50	50	180	150	8210G100 ♦	20P	●	8210G129	53P	●	6.1/F	11.6/H
2 1/2	1 3/4	45	5	150	125	90	50	50	50	180	150	8210G101	21P	●	-	-	-	6.1/F	11.6/F
NORMALLY OPEN (Open when de-energized), NBR Seating (PA Disc-Holder, except as noted)																			
3/8	5/8	3	0	150	150	125	125	125	80	180	150	8210G033	23D	●	-	-	-	10.1/F	11.6/F
3/8	5/8	3	5	250	200	200	250	200	200	180	180	8210G011 ⑧ ⑨	39D	●	-	-	-	10.1/F	11.6/F
1/2	5/8	4	0	150	150	125	125	125	80	180	150	8210G034 ✓ ♦	23D	●	-	-	-	10.1/F	11.6/F
1/2	5/8	3	0	150	150	100	125	125	80	180	150	-	-	-	8210G030 ✓	37D	●	10.1/F	11.6/F
1/2	5/8	4	5	250	200	200	250	200	200	180	180	8210G012 ⑧ ⑨	39D	●	-	-	-	10.1/F	11.6/F
3/4	3/4	5.5	0	150	150	125	125	125	80	180	150	8210G035 ✓ ♦	25D	●	-	-	-	10.1/F	11.6/F
3/4	5/8	3	0	150	150	100	125	125	80	180	150	-	-	-	8210G038 ✓	38D	●	10.1/F	11.6/F
3/4	3/4	6.5	5	250	200	200	250	200	200	180	180	8210G013	46D/52D	●	-	-	-	16.1/F	15.8/F
1	1	13	0	125	125	125	-	-	-	180	-	8210B057 ⑥ ⑩	34D	●	-	-	-	20/F	-
1	1	13	5	150	150	125	150	150	125	180	180	8210G014 ♦	47D/53D	●	-	-	-	16.1/F	15.8/F
1 1/4	1 1/8	15	0	125	125	125	-	-	-	180	-	8210B058 ⑥ ⑩	35D	●	-	-	-	20/F	-
1 1/4	1 1/8	15	5	150	150	125	150	150	125	180	-	8210G018 ♦	48D/54D	●	-	-	-	16.1/F	15.8/F
1 1/2	1 1/4	22.5	0	125	125	125	-	-	-	180	-	8210B059 ⑥ ⑩	36D	●	-	-	-	20/F	-
1 1/2	1 1/4	22.5	5	150	150	125	150	150	125	180	180	8210G032 ♦	49D/55D	●	8210G132	29D	●	16.1/F	15.8/F
2	1 3/4	43	5	150	125	125	150	150	125	180	180	8210G103 ♦	50P/56P	●	8210G133	30P	●	16.1/F	15.8/F
2 1/2	1 3/4	45	5	150	125	125	150	150	125	180	180	8210G104	51P/57P	●	-	-	-	16.1/F	15.8/F

① 5 psi on Air; 1 psi on Water.
② Valve provided with PTFE main disc.
③ Valve includes UItem (G.E. trademark) piston.
④ Letter "D" = diaphragm construction; "P"= piston construction.
⑤ ❍ Safety Shutoff Valve; ● General Purpose Valve.
Refer to Engineering Section (Approvals) for details.
⑥ Valves not available with Explosionproof enclosures.
⑦ On 50 hertz service, the watt rating for the 6.1/F solenoid is 8.1 watts.
⑧ AC construction also has PA seating.
⑨ No disc-holder.
⑩ Stainless steel disc-holder.

† UL listed for fire protection systems per UL429A 120/60, 110/50 24VDC, no prefix and voltage options offered.
‡ DC constructions must have solenoid mounted vertical and upright.
✓ ATEX/IECEx certified solenoid with prefix "EV".
▼ ATEX/IECEx certified solenoid for DC only with prefix "EV".
◆ Not available in 6 Volt DC. EF and HB prefix only.
♦ Valve available with lead-free brass body and bonnet using suffix "LF". The term "Lead-Free" for brass materials is defined by SDWA 1417 as having a maximum weighted average lead content of 0.25% on the wetted surface area. Valves are compliant to NSF/ANSI 372 low lead requirements.

Specifications (Metric units)

Pipe Size (in)	Orifice Size (mm)	Kv Flow Factor (m^3/hr)	Operating Pressure Differential (bar)							Max. Fluid Temp. ˚C		Brass Body			Stainless Steel Body			Watt Rating/ Class of Coil Insulation ⑦	
				Max. AC			Max. DC												
			Min.	Air-Inert Gas	Water	Light Oil @ 300 SSU	Air-Inert Gas	Water	Light Oil @ 300 SSU	AC	DC	Catalog Number	Const. Ref. ④	UL ⑤ Listing	Catalog Number	Const. Ref. ④	UL ⑤ Listing	AC	DC
NORMALLY CLOSED (Closed when de-energized), NBR or PTFE ② Seating																			
3/8	10	1.3	①	10	9	-	3	3	-	82	65	8210G073 ③	1P	●	8210G036 ③	1P	●	6.1/F	11.6/F
3/8	16	2.6	0	10	10	-	3	3	-	82	65	8210G093 ♦	5D	❍	-	-	-	10.1/F	11.6/F
3/8	16	2.6	0.3	14	10	9	9	7	7	82	65	8210G001 ▼♦	6D	❍	-	-	-	6.1/F	11.6/F
3/8	16	2.6	0.3	21	21	21	-	-	-	79	-	8210G006 ✓	5D	❍	-	-	-	17.1/F	-
1/2	11	1.9	①	10	9	-	3	3	-	82	65	8210G015 ③	2P	●	8210G037 ③	2P	●	6.1/F	11.6/F
1/2	16	3.4	0	10	10	-	3	3	-	82	65	8210G094 ✓♦	5D	❍	-	-	-	10.1/F	11.6/F
1/2	16	3.4	0	10	10	9	3	3	-	79	65	-	-	-	8210G087 ✓	7D	●	17.1/F	11.6/F
1/2	16	3.4	0.3	14	10	9	9	7	7	82	65	8210G002 ▼♦	6D	❍	-	-	-	6.1/F	11.6/F
1/2	16	3.4	0.3	21	21	21	-	-	-	79	-	8210G007	5D	❍	-	-	-	17.1/F	-
1/2	19	3.4	0.3	-	21	-	-	21	-	54	32	8210G227	5D	❍ †	-	-	-	17.1/F	40.6H
3/4	16	3.9	0	10	10	9	3	3	-	79	65	-	-	-	8210G088 ✓	7D	●	17.1/F	11.6/F
3/4	19	4.3	0.3	9	9	9	7	6	5	82	65	8210G009 ▼♦	9D	❍	-	-	-	6.1/F	11.6/F
3/4	19	4.3	0	10	10	-	3	3	-	82	65	8210G095 ✓♦	8D	❍	-	-	-	10.1/F	11.6/F
3/4	19	5.6	0.3	17	10	7	9	9	9	82	65	8210G003 ▼	11D	❍	-	-	-	6.1/F	11.6/F
3/4	19	5.1	0	24	21	14	14	14	14	93	82	8210G026 ② ‡ ◆	40P/10D	●	-	-	-	16.1F	30.8/F
1	25	11	0	10	9	9	9	8	8	82	82	8210G054 ‡ ◆ ♦	41D/31D	●	8210G089 ‡ ◆	45D/15D	●	16.1/F	30.8/F
1	25	11	0.3	10	10	7	9	9	9	82	65	8210G004 ▼ ♦	12D	❍	-	-	-	6.1/F	11.6/F
1	25	11.5	0	21	16	8	-	-	-	93	-	8210G027	42P	●	-	-	-	20.1/F	-
1	25	11.5	0.7	21	21	21	-	-	-	79	-	8210G078 ②	13P	-	-	-	-	17.1/F	-
1 1/4	29	13	0	10	9	9	9	8	8	82	82	8210G055 ‡ ◆	43D/32D	●	-	-	-	16.1/F	30.8/F
1 1/4	29	13	0.3	10	10	7	9	9	9	82	65	8210G008 ▼ ♦	16D	❍	-	-	-	6.1/F	11.6/F
1 1/2	32	19.5	0	10	9	9	9	8	8	82	82	8210G056 ‡ ◆	44D/33D	●	-	-	-	16.1/F	30.8/F
1 1/2	32	19.5	0.3	10	10	7	9	9	9	82	65	8210G022 ▼ ♦	18D	❍	8210G127	52D	●	6.1/F	11.6/H
2	44	37	0.3	10	9	6	3	3	3	82	65	8210G100 ♦	20P	●	8210G129	53P	●	6.1/F	11.6H
2 1/2	44	39	0.3	10	9	6	3	3	3	82	65	8210G101	21P	●	-	-	-	6.1/F	11.6/F
NORMALLY OPEN (Open when de-energized), NBR Seating (PA Disc-Holder, except as noted)																			
3/8	16	2.6	0.0	10	10	9	9	9	6	82	65	8210G033	23D	●	-	-	-	10.1/F	11.6/F
3/8	16	2.6	0.3	17	14	14	17	14	14	82	82	8210G011 ⑧ ⑨	39D	●	-	-	-	10.1/F	11.6/F
1/2	16	3.4	0	10	10	9	9	9	6	82	65	8210G034 ✓ ♦	23D	●	-	-	-	10.1/F	11.6/F
1/2	16	2.6	0	10	10	7	9	9	6	82	65	-	-	-	8210G030 ✓	37D	●	10.1/F	11.6/F
1/2	16	3.4	0.3	17	14	14	17	14	14	82	82	8210G012 ⑧ ⑨	39D	●	-	-	-	10.1/F	11.6/F
3/4	19	4.7	0	10	10	9	9	9	6	82	65	8210G035 ✓ ♦	25D	●	-	-	-	10.1/F	11.6/F
3/4	16	2.6	0	10	10	7	9	9	6	82	65	-	-	-	8210G038 ✓	38D	●	10.1/F	11.6/F
3/4	19	5.6	0.3	17	14	14	17	14	14	82	82	8210G013	46D/52D	●	-	-	-	16.1/F	15.8/F
1	25	11	0	9	9	9	-	-	-	82	-	8210B057 ⑥ ⑩	34D	●	-	-	-	20/F	-
1	25	11	0.3	10	10	9	10	10	9	82	82	8210G014 ♦	47D/53D	●	-	-	-	16.1/F	15.8/F
1 1/4	29	13	0	9	9	9	-	-	-	82	-	8210B058 ⑥ ⑩	35D	●	-	-	-	20/F	-
1 1/4	29	13	0.3	10	10	9	10	10	9	82	-	8210G018 ♦	48D/54D	●	-	-	-	16.1/F	15.8/F
1 1/2	32	19.5	0	9	9	9	-	-	-	82	-	8210B059 ⑥ ⑩	36D	●	-	-	-	20/F	-
1 1/2	32	19.5	0.3	10	10	9	10	10	9	82	82	8210G032 ♦	49D/55D	●	8210G132	29D	●	16.1/F	15.8/F
2	44	37	0.3	10	9	9	10	9	9	82	82	8210G103 ♦	50P/56P	●	8210G133	30P	●	16.1/F	15.8/F
2 1/2	44	39	0.3	10	9	9	10	9	9	82	82	8210G104	51P/57P	●	-	-	●	16.1/F	15.8/F

① 5 psi on Air; 1 psi on Water.
② Valve provided with PTFE main disc.
③ Valve includes Ultem (G.E. trademark) piston.
④ Letter "D" = diaphragm construction; "P"= piston construction.
⑤ ❍ Safety Shutoff Valve; ● General Purpose Valve.
Refer to Engineering Section (Approvals) for details.
⑥ Valves not available with Explosionproof enclosures.
⑦ On 50 hertz service, the watt rating for the 6.1/F solenoid is 8.1 watts.
⑧ AC construction also has PA seating.
⑨ No disc-holder.
⑩ Stainless steel disc-holder.

† UL listed for fire protection systems per UL429A 120/60, 110/50 24VDC, no prefix and voltage options offered.
‡ DC constructions must have solenoid mounted vertical and upright.
✓ ATEX/IECEx certified solenoid with prefix "EV".
▼ ATEX/IECEx certified solenoid for DC only with prefix "EV".
◆ Not available in 6 Volt DC. EF and HB prefix only.
♦ Valve available with lead-free brass body and bonnet using suffix "LF". The term "Lead-Free" for brass materials is defined by SDWA 1417 as having a maximum weighted average lead content of 0.25% on the wetted surface area. Valves are compliant to NSF/ANSI 372 low lead requirements.

Dimensions: inches (mm)

Const. Ref.		H	K	L	P	W
1*	in	3.85	3.00	1.91	3.41	1.69
	mm	98	76	49	87	43
2*	in	4.17	3.25	2.28	3.63	1.69
	mm	106	83	58	92	43
5	in	3.84	2.31	2.75	3.28	2.28
	mm	98	59	70	83	58
6*	in	3.38	1.94	2.75	2.80	2.28
	mm	86	49	70	71	58
7	in	4.19	2.50	2.81	3.47	2.39
	mm	106	64	71	88	61
8	in	4.13	2.47	2.81	3.44	2.29
	mm	105	63	71	87	58
9*	in	3.66	2.10	2.81	2.96	2.28
	mm	93	53	71	75	58
10*	in	5.20	3.40	2.80	4.50	2.50
	mm	131	86	71	114	62
11*	in	4.16	2.66	3.84	3.52	2.75
	mm	106	68	98	89	70
12	in	5.64	3.15	3.75	4.01	3.36
	mm	143	80	95	102	85
13	in	4.44	3.22	3.75	4.19	5.81
	mm	113	82	95	106	147
15*	in	5.20	3.30	3.80	4.40	3.80
	mm	133	83	98	111	98
16	in	5.64	3.15	3.66	4.01	3.56
	mm	143	80	93	102	90
18*	in	6.11	3.30	4.38	4.16	3.92
	mm	155	84	111	106	100
20*	in	7.33	3.71	5.06	4.57	4.87
	mm	186	94	129	116	124
21*	in	7.33	3.71	5.50	4.57	4.87
	mm	186	94	140	116	124
23	in	4.35	2.65	2.75	3.79	2.28
	mm	110	67	70	96	58
24	in	5.06	X	3.78	4.44	2.75
	mm	129	X	96	113	70
25	in	4.64	2.81	2.81	3.94	2.28
	mm	118	71	71	100	58
26	in	6.53	X	3.75	4.91	3.19
	mm	166	X	95	125	81
27	in	8.22	X	5.50	5.47	4.87
	mm	209	X	140	139	124
28	in	6.53	X	3.66	4.91	3.19
	mm	166	X	93	125	81
29	in	7.03	X	4.38	5.06	4.40
	mm	179	X	111	129	112

* DC dimensions slightly larger.
IMPORTANT: Valves may be mounted in any position, except as noted in specifications table.

Const. Ref. 1, 2

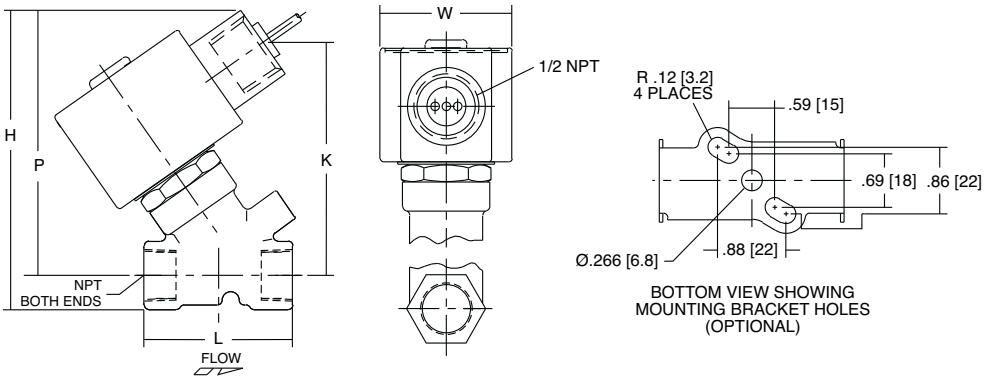

Const. Ref. 13

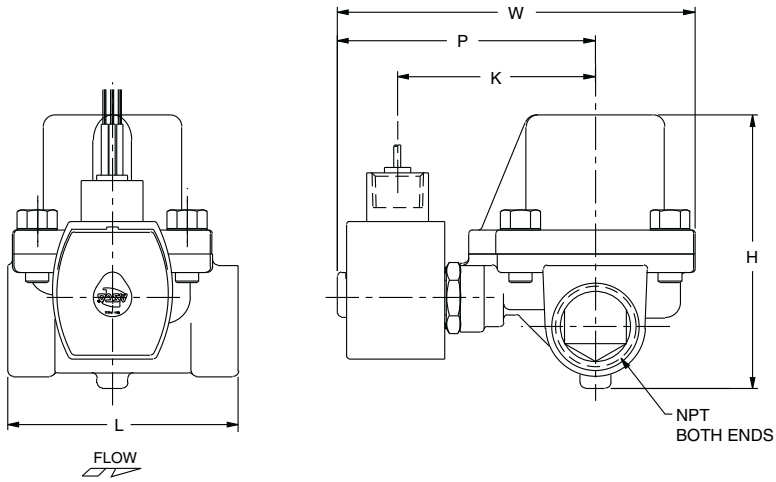

Const. Ref. 5-9, 11, 23 , 25, 37,38, 40-46, 52

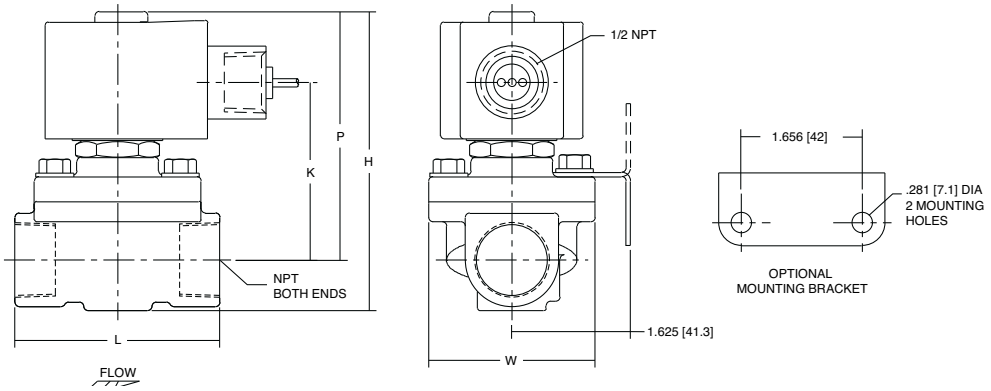

Dimensions: inches (mm)

Const. Ref.		H	K	L	P	W
30	in	8.22	X	5.06	5.47	4.87
	mm	209	X	129	139	124
31	in	5.13	3.19	3.76	4.32	3.27
	mm	130	81	95	110	83
32	in	5.60	3.44	3.66	4.57	3.27
	mm	142	87	93	116	83
33	in	5.92	3.66	4.51	4.80	3.89
	mm	150	93	115	122	99
34	in	6.91	X	3.75	6.09	3.25
	mm	176	X	95	155	83
35	in	7.34	X	3.66	6.34	3.25
	mm	186	X	93	161	83
36	in	7.66	X	4.38	6.56	3.91
	mm	1.95	X	111	167	99
37	in	4.61	2.75	2.81	3.89	2.39
	mm	117	70	71	99	61
38	in	4.61	2.75	2.81	3.89	2.39
	mm	117	70	71	99	61
39	in	5.42	2.31	2.75	4.86	3.80
	mm	138	59	70	123	97
40	in	5.20	3.29	2.81	4.50	2.28
	mm	132	83	71	114	58
41	in	5.13	3.10	3.75	4.32	3.25
	mm	130	79	95	110	83
42	in	6.43	4.40	3.93	5.62	3.25
	mm	163	112	100	143	83
43	in	5.57	3.35	3.66	4.57	3.25
	mm	142	85	93	116	83
44	in	5.90	3.57	4.38	4.79	3.91
	mm	150	91	111	122	99
45	in	5.26	3.17	3.75	4.38	3.84
	mm	134	81	95	111	98
46	in	4.95	3.10	3.84	4.31	2.75
	mm	126	79	98	110	70
47	in	6.43	3.59	3.75	4.81	3.52
	mm	163	91	95	122	90
48	in	6.43	3.59	3.66	4.81	3.73
	mm	163	91	93	122	95

IMPORTANT: Valves may be mounted in any position, except as noted in specifications table.

Const. Ref. 10, 15, 31, 32, 33

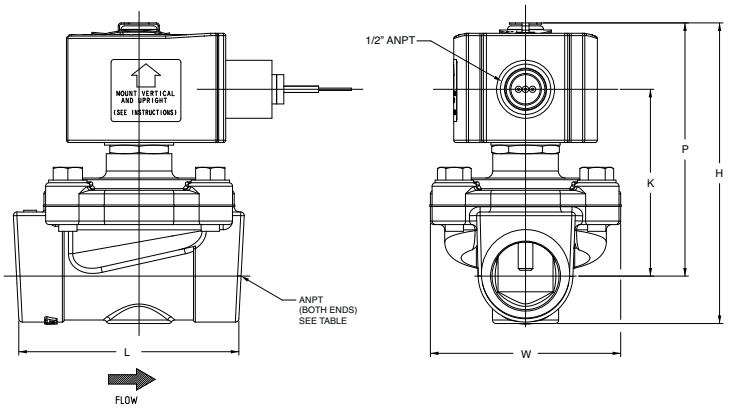

Const. Ref. 24, 34, 35, 36

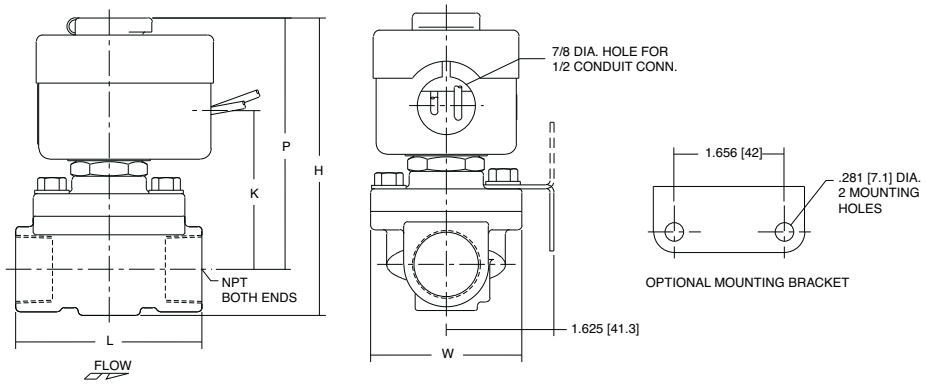

Const. Ref. 12, 16, 26, 28, 47, 48, 53, 54, 55

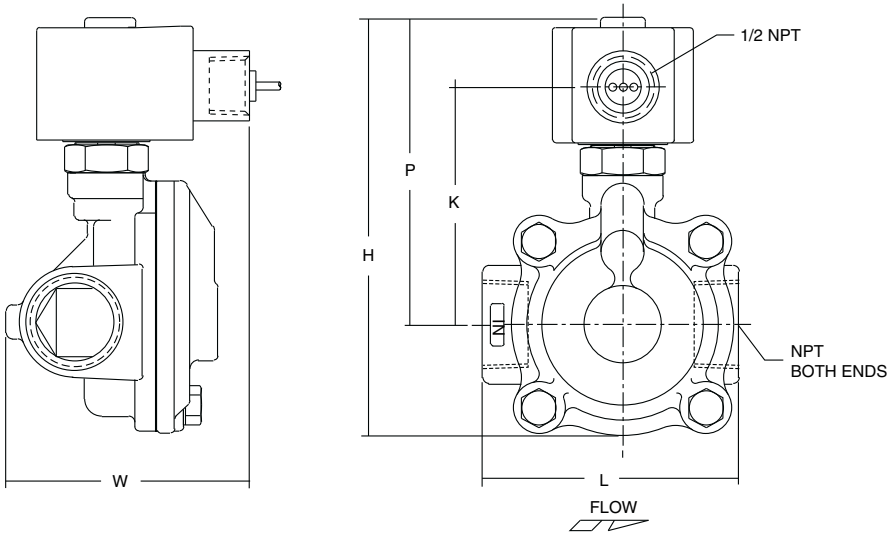

ASCO™ General Service Solenoid Valves

Brass or Stainless Steel Bodies | Pilot Operated | 3/8" to 2 1/2"

Dimensions: inches (mm)

Const. Ref.		H	K	L	P	W
49	in	6.91	3.75	4.38	4.96	4.40
	mm	176	95	111	126	112
50	in	8.13	4.15	5.06	5.37	4.87
	mm	207	105	129	136	124
51	in	8.13	4.15	5.50	5.37	5.18
	mm	207	105	140	136	132
52	in	5.00	3.08	3.84	4.33	3.18
	mm	127	110	98	110	81
53	in	6.46	3.57	3.75	4.83	3.74
	mm	164	91	95	123	95
54	in	6.47	3.57	3.66	4.83	3.94
	mm	164	91	93	123	100
55	in	6.93	3.72	4.38	4.98	4.30
	mm	176	95	111	126	109
56	in	8.17	4.13	5.06	5.39	4.71
	mm	208	105	129	137	120
57	in	8.17	4.13	5.50	5.39	5.21
	mm	208	105	140	137	132

IMPORTANT: Valves may be mounted in any position, except as noted in specifications table.

Const. Ref. 39

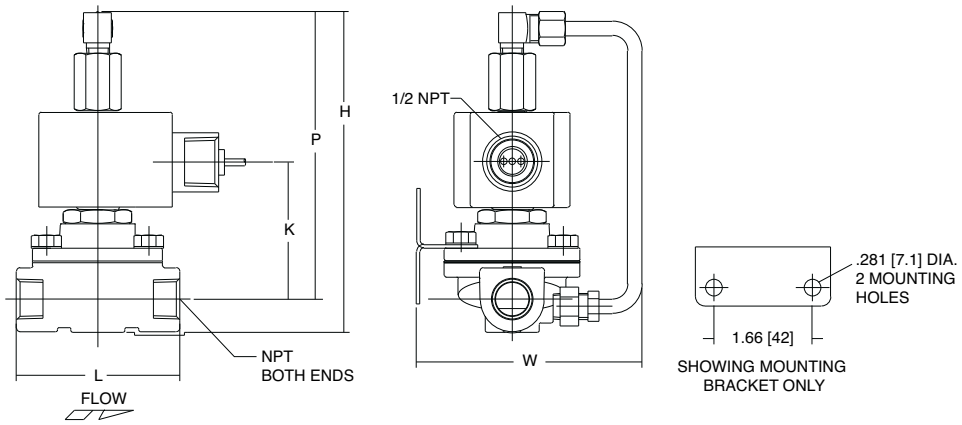

Const. Ref. 18, 29, 49

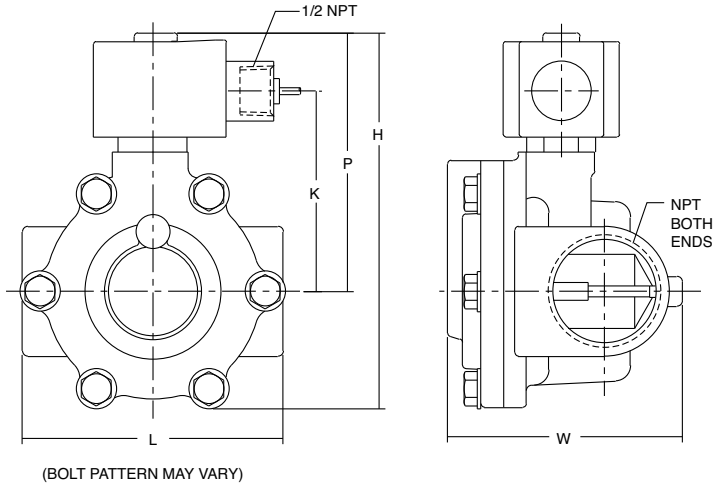

Const. Ref. 20, 21, 27, 30, 50, 51, 56, 57

